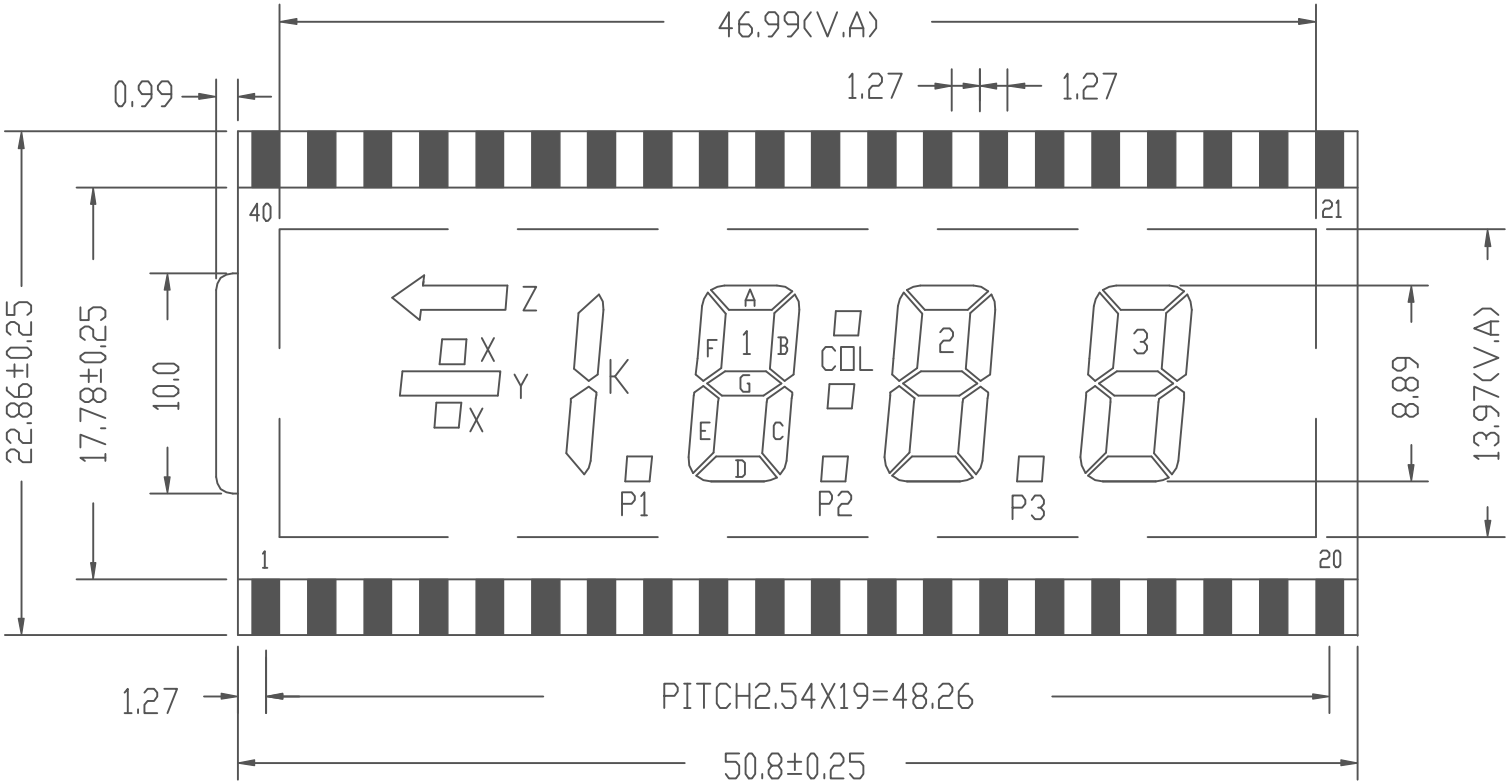

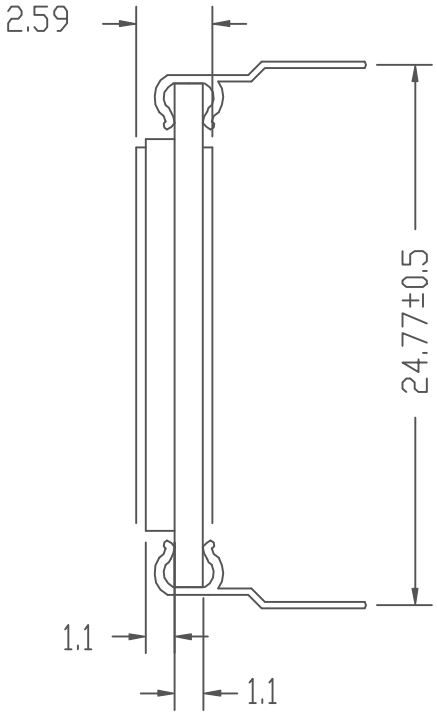

PIN NO	1	2	3	4	5	6	7	8	9	10	11	12	13	14	15	16	17
SEGMENT	COM	Y	K					P1	1E	1D	1C	P2	2E	2D	2C	P3	3E
PIN NO	18	19	20	21	22	23	24	25	26	27	28	29	30	31	32	33	34
SEGMENT	3D	3C	3B	3A	3F	3G	2B	2A	2F	2G	COL	1B	1A	1F	1G		
PIN NO	35	36	37	38	39	40											
SEGMENT				Z	X	COM											

JH-3